Cisco Secure

Verify User Identity

With Cisco Secure Remote Worker

Mike just started working from home, but he's using a personal laptop with an out-of-date internet browser when he logs on to check email.

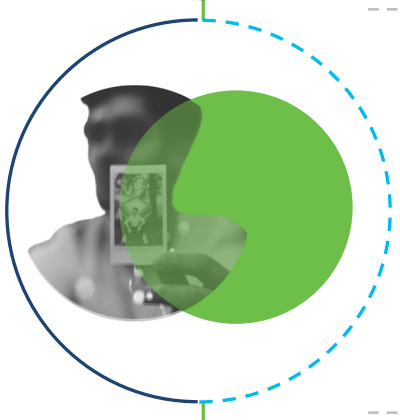

Hackers can now use Mike's browser to steal Mike's identity, get access to his personal or company information, install malware, and more.

Multi-factor authentication (MFA) would have detected the out-of-date browser when Mike first signed in from his personal laptop.

It would have verified that Mike is who he says he is, but also that his device meets company security standards.

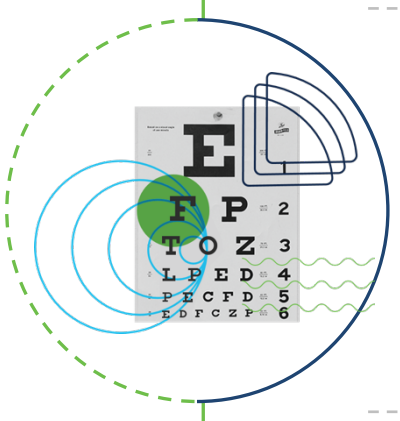

A security check would have produced a 'score' across multiple categories of risk, flagging Mike's outdated browser.

Mike would have received a prompt to update his browser so he could use the device to continue accessing work email and other apps.

Cisco Duo is the world's easiest and most secure MFA, with many MFA options for remote workers based on their needs.

Learn more at cisco.com/go/secureremoteworker.

The bridge to possible

Cisco Secure

Enable Secure Access

With Cisco Secure Remote Worker

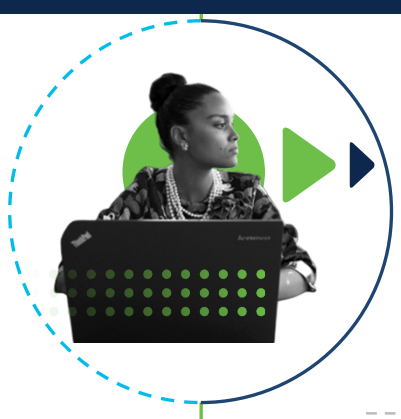

Anja works from home on a laptop she uses for work and personal reasons. Even though she has a VPN she's supposed to use, she's not always tracking if it's on.

She can get enterprise security through her VPN but when she's not using it, Anja could expose her company to malware and other threats without realizing it.

If she's not secured, attackers could infect her machine with malware that can spread throughout her corporate network, compromising both Anja and her employer.

A VPN protects users like Anja by creating a safe tunnel to the internet, encrypting user IP address and location so that all activity is invisible to outside threats.

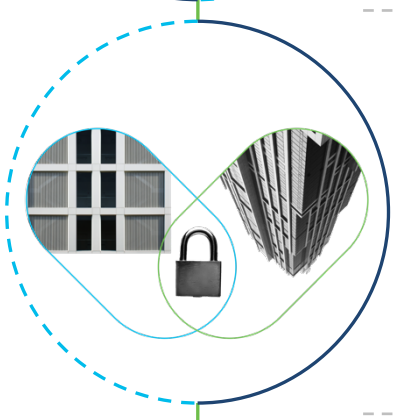

Cisco AnyConnect offers much more than a traditional VPN by providing secure network access and constant protection for users on any device, from any location.

By enabling access through Cisco AnyConnect, remote users are protected even when they're not on the VPN with additional layers of integrated security.

Always-on protection means that users like Anja can stay connected and productive when they're working from home with frictionless secure access to work resources.

Learn more at
cisco.com/go/secureremoteworker.

Cisco
The bridge to possible

Cisco Secure

Defend Against Threats

With Cisco Secure Remote Worker

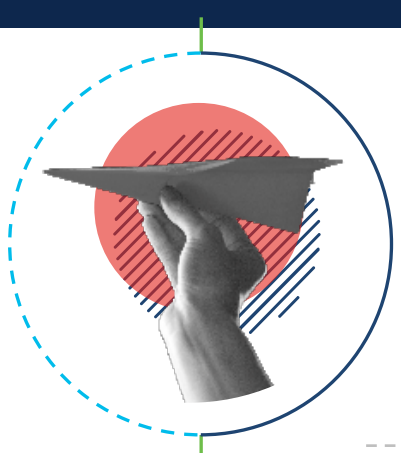

Christine clicks on an email link with information about crime rates in her neighborhood but doesn't realize it's a malicious campaign to install malware on her machine.

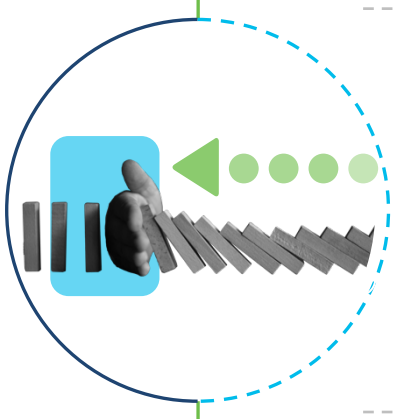

But luckily, since her employer secured Christine's laptop with a first line of defense, the domain was blocked, preventing Christine from connecting to the site.

If the malware HAD gotten in, it would have spread to other devices, expanding the impact to her colleagues and company network.

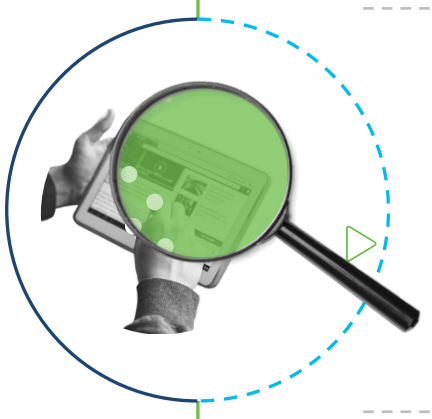

But because Christine's employer also has advanced malware protection, malware would have been detected right away and isolated on her machine.

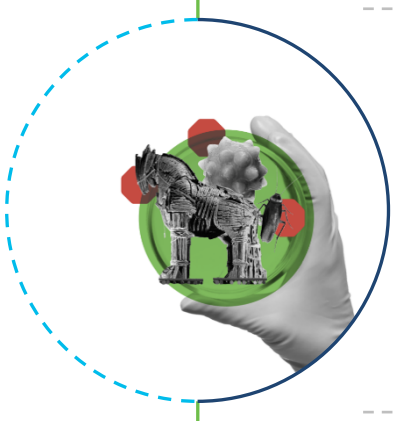

The advanced security would have identified everyone else who's been affected by that same malware—and then remediate the issue for all users immediately, with one click.

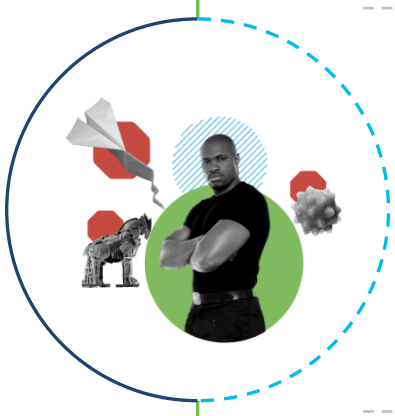

Cisco Umbrella and AMP for Endpoints defend workers against malware from the cloud edge to the endpoint.

Cisco security is backed by the largest non-government threat intelligence organization on the planet—blocking 20x more threats than any other vendor.

Learn more at cisco.com/go/secureremoteworker.

Cisco
The bridge to possible

Cisco Secure

Verify, Access and Defend

With Cisco Secure Remote Worker

Jeff just started working remotely full-time. Because his employer uses Cisco Secure Remote Worker solutions, he can work from home with the confidence that he's always protected.

He uses a simple MFA (multi-factor authentication) to verify his identity and quickly access apps and work files, and a security check ensures his laptop is healthy and up to date.

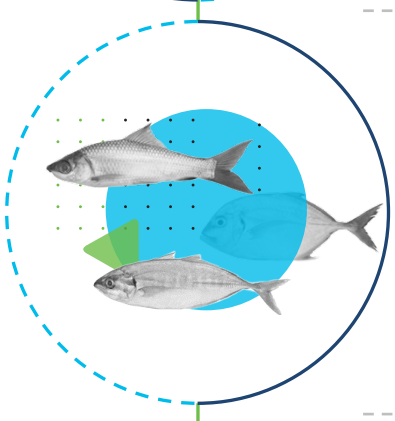

Next, he uses a VPN (virtual private network) that encrypts his IP address and makes him "invisible" to outside threats as he accesses the company network.

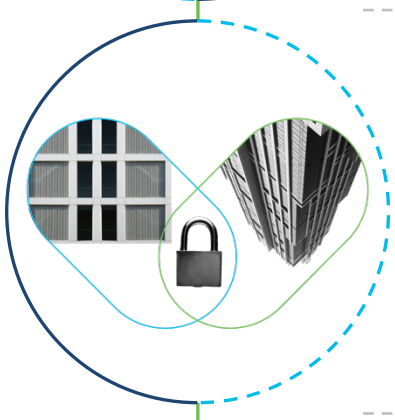

As he works, both a first and last line of defense defends his data from any kind of malicious threat–blocking, detecting and remediating issues.

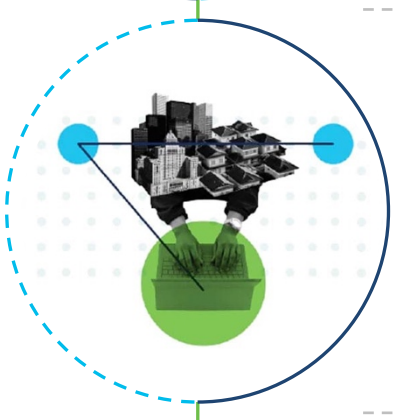

Cisco Secure Remote Worker is a simple, effective and integrated security offering that makes it easy for remote workers to stay connected and productive when they're away from the office.

It's built on a single platform of integrated solutions that protects users everywhere and helps businesses of all sizes secure their workforce, fast.

We help defend businesses of all sizes every day, whether they're on or off network.

Learn more at cisco.com/go/secureremoteworker.

Cisco
The bridge to possible